Handle Kit for 30 Built-in refrigerator

Accessories

$ 472

HERHK30PI

Handle Kit for 30 inches Built-in refrigerator

Heritage Series Range style

Guarda online

Specifications

Features

Size	30 in
Family	handle kits
Product	refrigerators
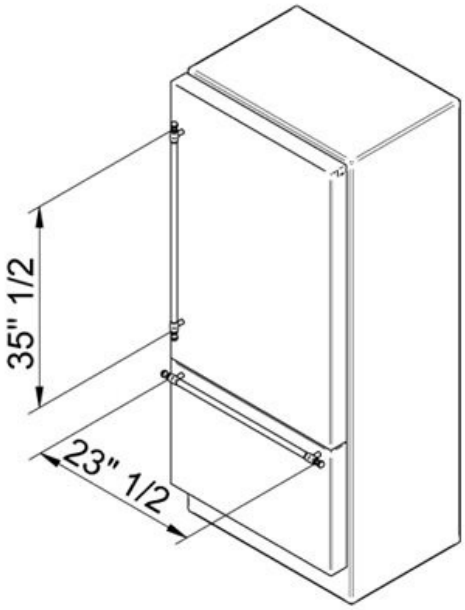
Dimensions