24" Built-in Wine Cellar Column Panel Ready

Master Series

$ 7,199

REF24WCPRR/23

These premium built-in column wine cellars are masterpieces of Bertazzoni design and technology. Their stylish panel ready and glass doors reflect close attention to detail and high-quality materials.

Designed to keep your wine at its best, it offers a high level of control with 2 temperature zones for red and white wine that cool between 40° F and 65° F. The unique side-to-side airflow circulation maintains the correct temperature in each zone when opening the door for reloading. The intuitive digital touch-control interface let you select the perfect temperature range and control the humidity. Red wine ageing function lets you lay down the bottles that will be kept in the best condition possible.

A tinted triple glass UV protected door protects your valuable wine collection from light damage. A vibration damping system on the compressor lets wine rest undisturbed. Custom lighting keeps the lights on for 12 hours for maximum visual impact.

Designed to allow for elegant configurations of wine cellar, refrigerator and freezer in any desired width, they work in harmony with handles and finishes available for every Series.

To mount a Bertazzoni handle kit on a custom kitchen cabinet panel, use brass threaded inserts available for purchase **here**.

Using one of the 3 available handle kits in Professional, Master and Heritage Series style, this refrigerator integrates seamlessly with all other Bertazzoni appliances into style-harmonized suites for a true, high-performing kitchen.

Handle kits are sold separately.

Bertazzoni built-in column wine cellars are designed with pride in Italy and covered by an industry-leading 2-year parts and labor warranty.

See predecessor model **here**.

Guarda online

Specifications

Features

General features	
Size	24 in
Cooling system	two temperature zones
User interface	TFT Touch & Scroll interface
Display functions	Door adjar alarm, Humidity level setting, Closed door lights on mode, Sabbath Mode
Lighting	LED surround illumination
Door ajar alarm	yes
Door finishing	panel ready
Cabinet finishing	white metal
Wine racks	12 wooden shelves
Bottle capacity	80 bottles
Sound rating	41 dbA
Certification	CETLUS

Technical specifications	
Electrical supply	115 V - 60 Hz - 1.4 A
Power rating	152 W
Power connection	NEMA 5-15P with 79" power cord
Energy consumption	475.0 kWh/yr

Dimensions

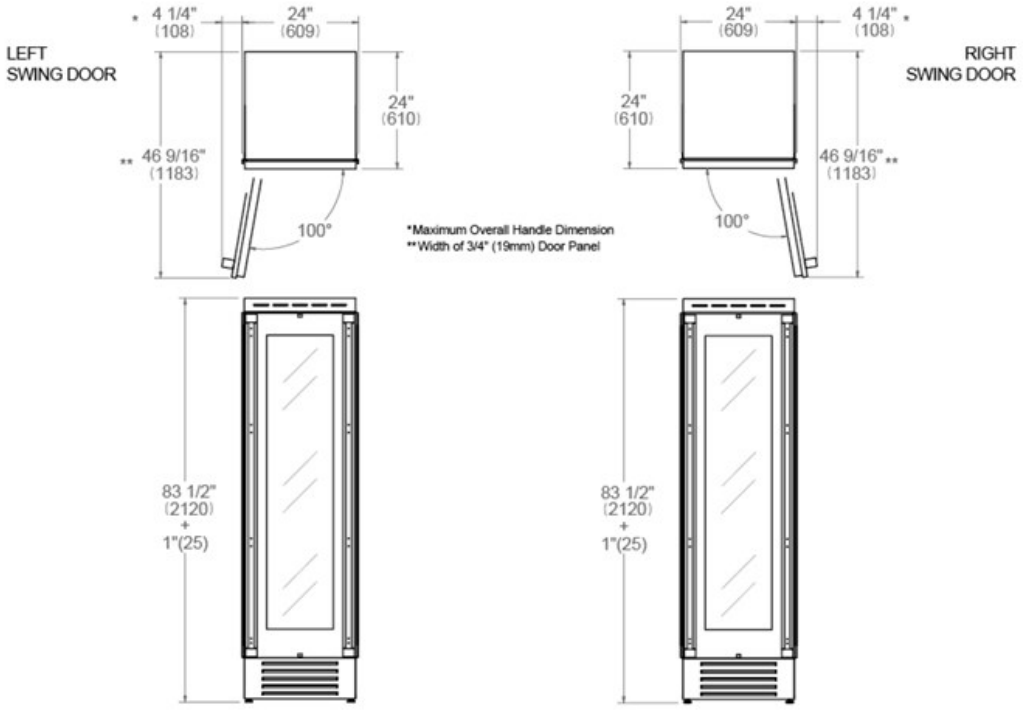
LEFT
SWING DOOR
* 4 1/4"
(108)
24"
(609)
24"
(610)
** 46 9/16"
(1183)
100°
*Maximum Overall Handle Dimension
**Width of 3/4" (19mm) Door Panel
24"
(609)
4 1/4" *
(108)
RIGHT
SWING DOOR
24"
(610)
46 9/16" **
(1183)
100°
83 1/2"
(2120)
+
1"(25)
83 1/2"
(2120)
+
1"(25)