30" Built-in Freezer Column Panel Ready

Master Series

$ 6,949

REF30FCIPRR/23

These premium built-in column freezers are masterpieces of Bertazzoni design and technology. Their stylish panel ready front doors reflect close attention to detail and high-quality materials, inside and out.

The large capacity cavity offers versatile storage with 2 height-adjustable shelves, plus the top of the ice maker acting as another shelf. 3 drawers and 2 height-adjustable door bins complete the picture.

Intuitive temperature controls allow for total accuracy with a digital touch-control user interface. The variable speed compressor offers optimal temperature control including rapid freezing and lateral air circulation keeps the entire freezer at the same temperature throughout. You can select ice cube size with the automatic ice maker with water filter and increase ice production up to 50% with Super Ice function. Replacement water filters are available for purchase **here**.

Proprietary lift & swing hinges allow for flush installation with minimal clearance from surrounding cabinet panels. This allows for elegant configurations of refrigerator, freezer and wine cellar in any desired width. All three columns work in harmony with handles and finishes available for every Series.

To mount a Bertazzoni handle kit on a custom kitchen cabinet panel, use brass threaded inserts available for purchase **here**.

Using one of the 3 available handle kits in Professional, Master and Heritage Series style, this refrigerator integrates seamlessly with all other Bertazzoni appliances into style-harmonized suites for a true, high-performing kitchen.

Handle kits are sold separately.

Bertazzoni column freezers are designed with pride in Italy and covered by an industry-leading 2-year parts and labor warranty.

See predecessor model **here**.

Guarda online

Specifications

Features

General features	
Size	30 in
Cooling system	frost free
User interface	TFT Touch & Scroll interface
Display functions	Door ajar alarm, Shopping Mode, Vacation Mode, Bottle cooler, Ice maker, Ice cube size setting, Water filter replacement reminder, Super ice, Sabbath Mode
Lighting	LED surround illumination
Door ajar alarm	yes
Door finishing	panel ready
Cabinet finishing	white metal
Door storage	2 bins
Freezer net capacity	16.8 cu.ft³
Freezer shelves	2 height-adjustable
Freezer drawers	3 soft-close metal drawers
Automatic ice maker	yes
Ice production capacity	2.2 lbs/24 hrs
Water filter	yes
Water supply pressure	8 psi to 75 psi
Sound rating	41 dbA
Certification	CETLUS
DOE compliant	yes

Technical specifications	
Electrical supply	115 V - 60 Hz - 3 A
Power rating	327 W
Power connection	NEMA 5-15P with 79" power cord
Energy consumption	598.0 kWh/yr

Dimensions

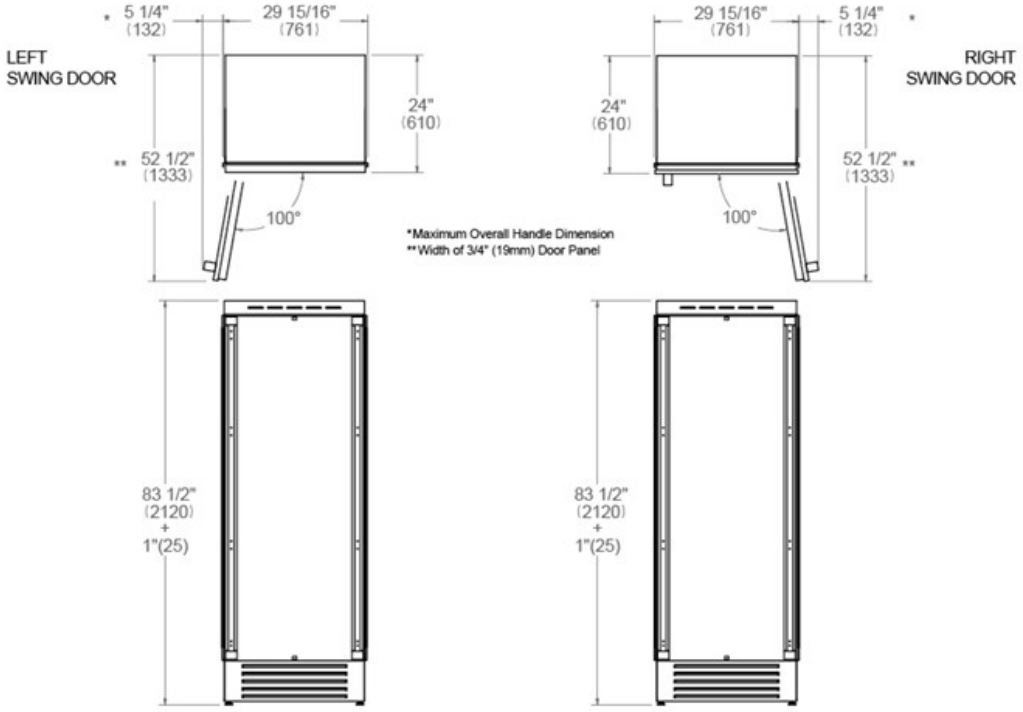
LEFT
SWING DOOR
RIGHT
SWING DOOR
* 5 1/4" (132)
29 15/16" (761)
24" (610)
** 52 1/2" (1333)
100°
*Maximum Overall Handle Dimension
**Width of 3/4" (19mm) Door Panel
83 1/2" (2120) + 1"(25)